| NO. | 4D350S-2021-ErP2015-A0 |
|---|---|

WEIGUANG®

# SPECIFICATION 规格说明

HANGZHOU WEIGUANG ELECTRONIC CO.,LTD.

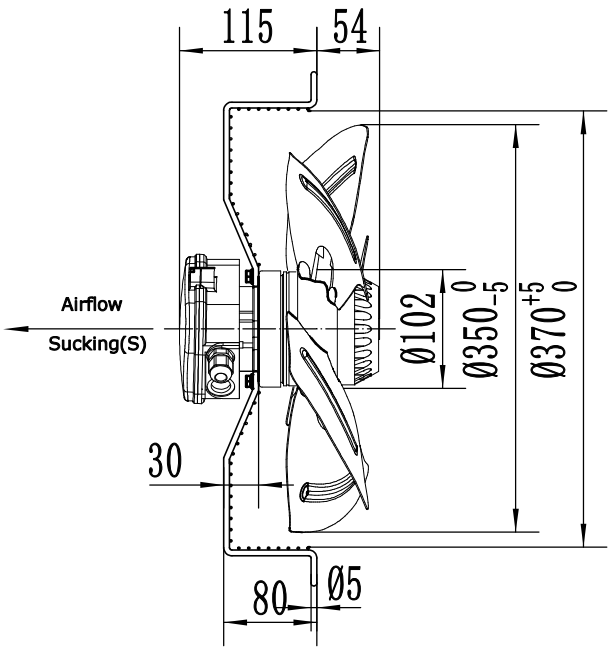


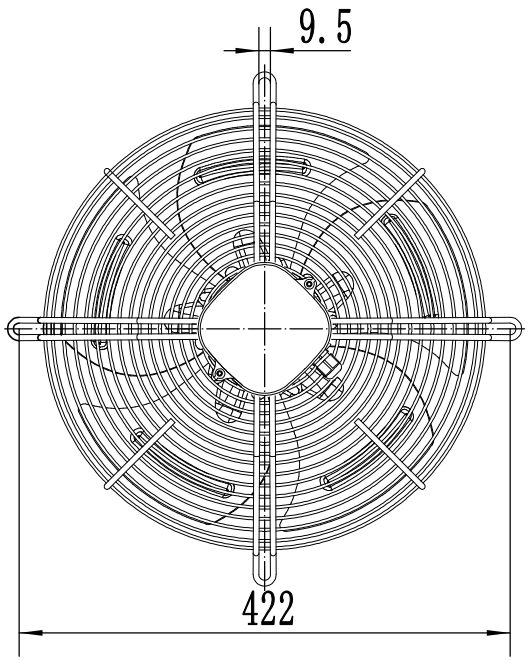


| | |
|---|---|
| UNIT 类型 | Axial fan motor 外转子轴流风机 |
| MOTOR 电机型式 | Three phases motor |
| MOTOR TYPE 电机型号 | YWF4D-350S-P102/34-G |
| VOLTAGE 额定电压 (V) | 380 |
| FREQUENCY 频率 (Hz) | 50 |
| INPUT POWER 输入功率 (W) | 125 |
| CURRENT 电流 (A) | 0.38 |
| SPEED 转速 (r/min) | 1420 |
| AIR FLOW 20Pa 风量 (m³/h) | 2355 |
| NOISE 噪音 (dBA) | 64 |
| ROTATION 旋转方向 | CW ,looking into the end-shield<br>顺时针，从端盖端方向看 |
| INSULATION CLASS 绝缘等级 | F |
| MOTOR PROTECTION 电机保护 | Thermocontact 150±5℃ 热保护器 |
| TEMPERATURE RISE 温升 | 75K max 运行温升不超过75K |
| PROTECTION CLASS 防护等级 | IP54 |
| OPERATING TYPE 工作定额 | S1 连续工作制 |
| AMBIENT TEMPERATURE 适用环境温度 | -30°C +60°C |
| BEARINGS 轴承型式 | Ball bearings 滚珠轴承 |
| MOUNTING TYPE 安装方式 | Horizontal or Vertical 垂直或水平安装 |
| ELECTRICAL CONNECTION 电源线 | Lead wire RV-90 4G 0.50mm²+2G 0.30mm², Length 100mm in terminal box connected<br>接线盒（4芯0.5mm²+2芯0.3mm²线长100mm） |
| APPROVALS 认证标记 | CCC、CE |
| NET WEIGHT/GROSS WEIGHT净重/毛重 | 5.0/6.0kg |
| PACKING 包装 | 38.5*38.5*19cm |

LABEL (铭牌):

WEIGUANG®
Axial Fan Motor
YWF4D-350S
P102/34-G
380V 50Hz 0.38A 65/125W 1420r/min
CL.F XX/XX
CE

WIRING DIAGRAM（接线图）:

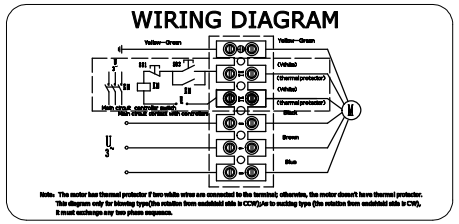


FLOW RATE CURVE（风量曲线）:

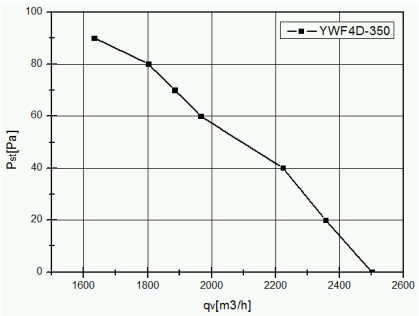


ErP2015 LABEL(ErP2015标签):

ErP2015（N40）
N=43.02 η statA= 31.1%
YWF4D-350S-P102/34

| | | | | | | | SIGN | DATE |
|---|---|---|---|---|---|---|---|---|
| | | | | | | DRN. BY | | |
| | | | | | | CHD. BY | | |
| | | | | | | ENG. BY | | |
| REV. | DESCRIPTION | APPROVED | DATE | | | APP. BY | | |

TITLE
YWF4D-350S-P102/34-G

PROJECTION

A4
SCALE
SHEET: of